Improved Recycle Folded Cascode OTA with Current Control Circuit

[1]Nordiana Mukahar and [2]Siti Aishah Che Kar
Faculty of Electrical Engineering, Universiti Teknologi MARA, 23000 Dungun, Terengganu.

Abstract—**This paper presents an improved architecture of folded cascade OTA with current control circuit that achieves improved DC gain and settling time without sacrificing power and area. This is achieved by exploiting and using idle device in the signal path and separates the AC and DC path, which results in an enhanced transconductance, output resistance, gain, settling time and power dissipation. Recycle folded cascade amplifier architecture was implemented in 90 nm CMOS process with 1 V power supply. Simulation results shows that the proposed structure significantly increase the DC gain bandwidth compared to the recycle folded cascade OTA and consume very low power dissipation. Theoretical analysis and LTSpice simulations prove the performance of the new OTA.**

Keywords-operational transconductance amplifier; DC gain; settling time; power dissipation

I. INTRODUCTION

Research in analog circuit design is focused on low power battery operated equipment to be used in portable equipment of electronic application. A reduced supply voltage is necessary to decrease power consumption to ensure reasonable battery lifetime in portable electronics. Realizing high performance analog circuit with limitation of power is a challenge. A device`s figure of merit is illustrated by the gain-bandwidth product which states that at higher frequencies, the gain decreases. To have a good gain at high frequency, higher bias current is needed. This shows that in general a fast circuit consumes high power, therefore inherent property prompts for specific techniques that can reduce power while maintaining performance. Operational Transconductance Amplifier(OTA) is a fundamental building block of analog circuit and systems. In OTA, the ratio of transconductance to current consumption reflects the power efficiency of the amplifier. This motivated the study presented in this work, searching for a power efficient OTA architecture with good supply voltage scalability and large flexibility for power/speed tradeoffs, while maintaining the correct analog functionality. In the design, OTA must meet the following requirement for the best operation such as large bandwidth, high gain, high slew rate and low power.

Researched has been focused on a novel technique to improves the performance of OTA without increasing power or area consumption. Recycling folded cascade structure which is proposed in by [1, 2] intends to idle devices as driving transistor by splitting it to conduct current mirror with fixed ratio. Another method was implementing AC and DC path separation in current mirror to enhance the gain of the OTA [3]. However, it shows degradation in phase margin due to the multiple path current mirrors. Multiple path scheme of current mirror introduced in [4] was also applied to the Three-Current-Mirror OTA to enhance the output impedance and slew rate but it is not suitable for high speed applications as the transfer function of the OTA had numerous low frequency pole-zero pairs. Switching circuit proposed in [5] utilize the idle signal path to control the current mirror of output stage. In this work, the idea of exploring idle signal device proposed in [2, 5] form the basis of the proposed modifications to the conventional folded cascade OTA. The paper is presented as follows; Section 2 explains the proposed architecture, whereas Section 3 and 4 discuss the simulation results to evaluate the performance and conclusions.

II. PROPOSED ARCHITECTURE

The operational transconductance amplifier (OTA) is an amplifier where all nodes are low impedance except the input and output nodes [6]. The conventional OTA in Fig. 1 becomes popular choice because of its single pole characteristic and wide output voltage swings. Transistor M5 and M6 in Fig. 1 draw the most current and it has the largest transconductance in many designs. However, their role is only limited to providing a folded node for the small signal current generated by the input driver (M3 and M4). The output resistance, R_O and transconductance, G_{mo} of the conventional OTA are defined as

$$R_O = g_{m12} r_{12} \left(r_{ds3} \parallel r_{ds5} \right) \parallel g_{m10} r_{ds10} r_{ds8} \tag{1}$$

$$G_{mo} = g_{m4} . \tag{2}$$

The very common method to enhance the gain is by increasing the output resistance at the output stage by cascading the transistor but in turn suppressing the voltage swing. Input transistor (M4 and M3) and driver transistor (M5 and M6) play a greater role to determine the output transconductance of amplifier. Without reducing the voltage swing or increasing current and power consumption, M5 and M6 can be exploiting to shifting the gain to the desired level.

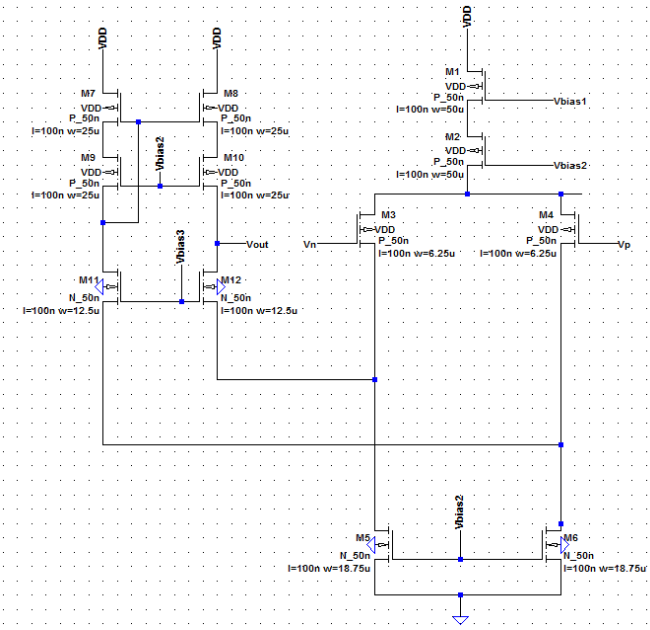

Figure 1. Conventional OTA.

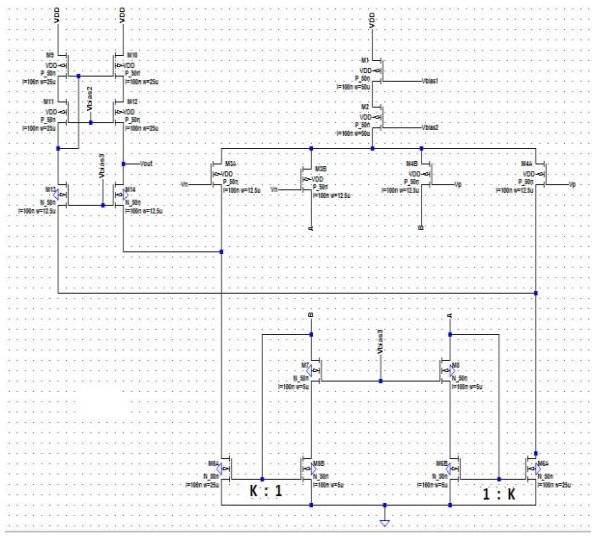

Figure 2. .Recycling folded cascode OTA [1].

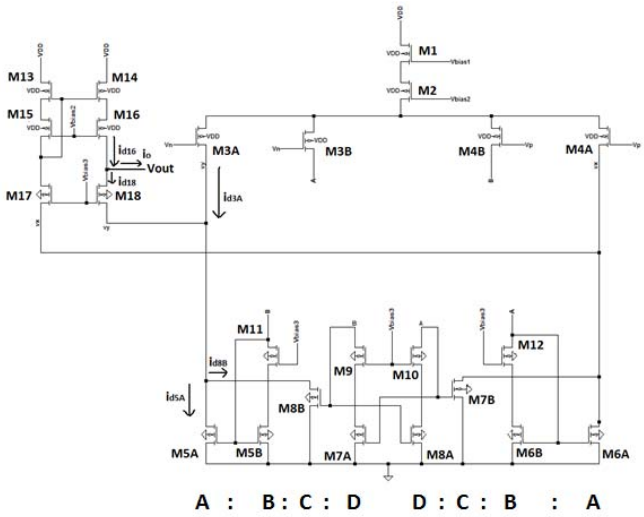

Figure 3. Recycling folded fascode with current control circuit.

Fig. 2 shows recycling folded cascade structure which is proposed by [1]. The input pair is split into half (M3A, M3B, M4A, M4B) while ratio of current mirror (M5A:M5B and M6B:M6A) is set to four to maintain the correct summation of DC currents without increasing biasing current and power consumption. In this work, AC and DC current is sharing the same path, so the transconductance in this circuit is limited by DC currents [3]. The gain enhancement is attributed to the increased r_{ds} of M3A and M5A as they conduct less current compared to their counterparts M3 and M5 in Fig. 1.

The proposed structure as shown in Fig. 3 is a modification to folded recycling structure in Fig. 2 [1] by adding the current control circuitry (M7A, M7B, M8A, M8B, M9, and M10) to reduce the quiescent current at the M3A. Transconductance based methodology is by analyzing the signal device that contribute to the output transconductance and control circuit introduced in [4] form the basis of this work which during the quiescent condition transistor M7B and M8B act as voltage control current sources where a significant amount of the drain current M3A now flows into the current source M7B as well reducing the output current. Transistor M9, M10, M7A and M8A sense the input differential voltage and control two voltage controlled current sources, M7B and M8B. If the current through M3A increases by $g_{m3A} \times (V_{in}/2)$, the current through M8B decreases by $g_{m11} \times V_{in}/2 \times C/D$, where $V_{in} = V_p - V_n$. The total amount of current increase in M5A is equal to the amount of power change in M8B. Therefore the total current change in M5A is the sum of the changes in M3A and M8B. DC currents flow through transistor M5A, M5B, M7A, M6A, M6B and M8A while almost no AC current flows through M7A, M8, M9 and M10 because they have high impedance for AC signal. The ratio A: B: C: D indicates the size of devices and for this design the ratio 4: 1: 8: 1 is used.

Assuming that transconductance parameter, $\beta_{3A} = \beta_{3B} = \beta_{4A} = \beta_{4B}$, the current, i_{d4A} is given by

$$i_{d4A} = \frac{i_d}{4} = \frac{g_{m,in}}{2}\left(\frac{v_p - v_n}{4}\right) \tag{3}$$

$$i_o = i_{d,16} - i_{d,18} = 5i_d \ . \tag{4}$$

The overall transconductance for the recycling folded cascade amplifier with current control circuit can be determine as follow:

$$G_{m,new} = \frac{i_o}{v_p - v_n} = \frac{5}{2} g_{m,in} \tag{5}$$

From (5), it can be seen that the new transconductance output is 2.5 times greater compare to the original transconductance value.

The expression for the new output resistance transconductance for the proposed architecture is represented in (4) respectively.

$$R_{o,new} = g_{m,19} r_{ds,19} \left(R_{out,3A,5A}\right) \| \, g_{m,16} r_{ds,16} r_{ds,14} \tag{6}$$

with g_m and r_{ds} as the transconductance and internal resistance of transistor respectively.

Where the transconductance $g_{m,in}$ is the total input transconductance $g_{m,3A,3B} + g_{m,4A,4B}$ which equals the input transconductance $g_{m,3,4}$ in (2). The current at transistor M5A is reduced by the existence of control circuit M8B and as the result, the output resistance is increased as

$$R_{out,3A,5A} = r_{o,3A} \| \, r_{o,5A} = \frac{2}{\left(\lambda_{3A} + \lambda_{5A}\right)} \times \frac{B + C + D}{A} \ . \tag{7}$$

Examining (3) and (5), since both output transconductance and resistance is increased, the overall DC gain, A_v increase in the proposed architecture is significant

$$A_v = G_{m,new} \times R_{o,new} \tag{8}$$

III. Experimental Results

In order to investigate the feasibility of the enhancement technique discussed above, the simulated open loop performance of the proposed architecture is compared to the performance of recycle folded cascade architecture [1]. Both circuits were designed with the same length 100 nm and widths are decided to have overdrive voltage about 200 mV. In order keep the DC current unchanged, the ratios of transistors are as follows; the value of A, B, C and D in the proposed architecture is 4, 1, 8 and 1, respectively.

The circuit has been simulated using LTSpice and BSIM MOS transistor models (level 54) with well 50nm CMOS process. Both folded recycle OTA and proposed OTA are designed to have same 100µA tail current and power supply 1 V. Fig. 4(b) shows that the DC gain is improved by approximately 5 dB, however the phase margin of the proposed architecture is slightly lower compared to RFC. This is due to the increased capacitance at the cascade nodes, increasing pole and zero. The dc gain of the new OTA is significantly increased from 52 to 59 dB. The unity gain frequency of the RFC is 260 MHz with 48° phase margin, while new OTA has 230 MHz with 40° phase margin. The effect of non dominant poles decrease the phase margin of the new OTA, but it still a sufficient phase margin is achieved. Step response of the new OTA is shown in Fig. 5 to confirm the stable operation of the circuit. Simulation results show there is a slight overshoot indicating a low phase margin of 40 °. Thus, compensation capacitor is necessary to remove the overshoot,

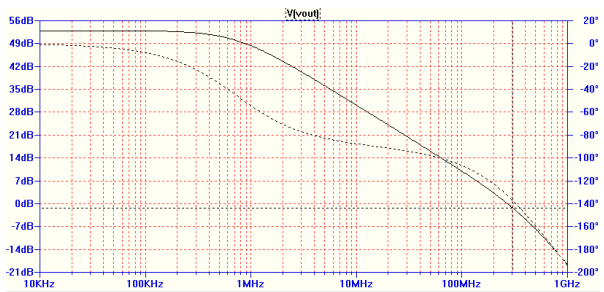

Figure 4(a). AC Analysis RFC [1].

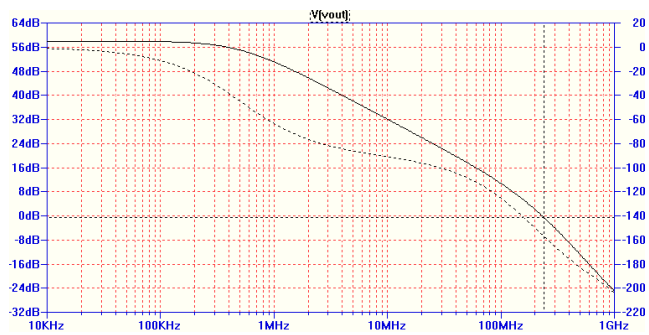

Figure 4(b). AC Analysis proposed OTA.

Fig. 4(a) and (b) shows the frequency responses of both RFC and proposed OTA with 5 pF load capacitor respectively.

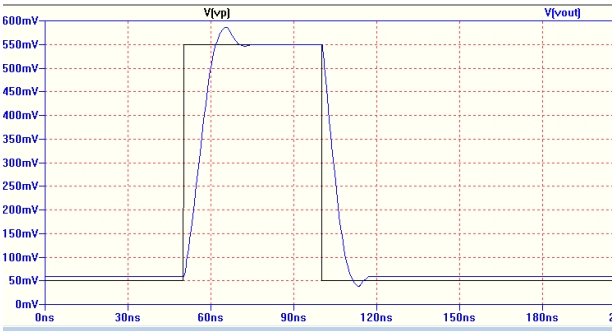

Figure 5. Step response.

The large signal transfer characteristic of the OTA for unloaded output is shown in Fig. 6 and the voltage swing is relatively wide rail to rail close to VDD.

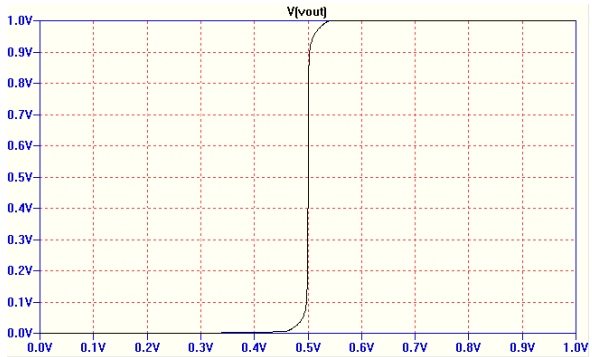

Figure 6. Voltage swing.

The simulation results is shown in Table 1 comparing the performance of recycle folded OTA with proposed architecture.

TABLE I. PERFORMANCE COMPARISON BETWEEN PROPOSED OTA AND CONVENTIONAL OTA (RFC) [1]

Proposed OTA		**Conventional OTA (RFC) [1]**	
DC Gain	57.9565 dB	DC Gain	52.9649 dB
UGBW	231.7 MHz	UGBW	260.435 MHz
Phase Margin	40°	Phase Margin	48°
Transconductance,G_m	2.52 µA/V	Transconductance,G_m	1 µA/V
Capacitive Load	5pF	Capacitive Load	5pF
1 % Settling Time	9.6854 nS	1 % Settling Time	11.2848 nS
Bias Current	100uA	Bias Current	100uA
Power Dissipation	220µW	Power Dissipation	280 µW

IV. CONCLUSION

An improved architecture of recycling folded cascade OTA is proposed to enhance the output resistance of the OTA without increasing power or area consumption by adding the current control circuit. Simulation shows that the proposed architecture has a 5 dB improvement compared to the RFC architecture and also there is an improvement in transconductance parameter. The proposed OTA consumed slightly less power dissipation about 220 µW.

ACKNOWLEDGMENT

The authors would like to thank to Research Management Institute, Universiti Teknologi MARA in providing financial support through Excellent Fund Scheme.

REFERENCES

[1] R.S. Asaad, and J. S. Martinez, "The recycling folded cascade : general enhancement of the folded cascade amplifier," Journal of Solid-State Circuits, vol. 44, pp. 2535-2542, 2009.

[2] R.S. Asaad, and J.S. Martinez, " Enhancing general performance of folded cascade amplifier by recycling current ," Electronic Letters, vol. 43, 2007.

[3] Y.L. Li, K.F. Han, X. Tan, N. Yan, and H. Min, "Transconductance enhancement method for operational transconductance amplifiers ," Electron Letters, vol. 46, pp. 1321-1323, 2010.

[4] K. Nakamura, and L.R. Carley, "An enhanced fully differential folded-cascode op amp," Journal of Solid-State Circuits, vol. 27, pp. 543-568, 1992.

[5] J.J. Roh, "High gain class-AB OTA with low quiescent current," Journal of Analog Integrated Signal Process, vol. 47, pp. 225-228, 2006.

[6] T. Kulej, "Low voltage low transconductance OTA in 50 nm CMOS," Proceedings of the International Conference and Electronic System, pp. 273-276, 2010.