https://doi.org/10.24191/jeesr.v29i1.021

Load Disturbance Test In Steam Distillation Process through of Fuzzy Based Controller Integrated PID Anti-Windup

Haslizamri Md Shariff, Mohd Hezri Fazalul Rahiman*, Mazidah Tajjudin, Mohd Hezri Marzaki, Mohd Hafiz A. Jalil, and Ku Siti Syahidah Ku Mohd Noh

***Abstract*- The Proportional-Integral-Derivative (PID) controller is commonly apply in control systems due to its simple computation and structure. Unfortunately, it has a weakness known as the wind-up phenomenon, which attack when the integrator action continuously compute without realize or recognize an input reach saturation region. These consequence contribute to high overshoot and longer settling times, as the controller suffer to unwind the control input signal. Additionally, PID controllers often suffer to regulate the nonlinear dynamics behaviour of Small-scale Steam Distillation Systems. The objective of this paper to build a Fuzzy-based controller with an integrated anti wind-up strategy to improve system response especially in load disturbance. The Fuzzy structure embedded with PID controller is capable to regulate the nonlinear dynamics of the system behaviour. The anti wind-up strategy helps improve system response especially once the system facing the load disturbance, ensuring better temperature regulation. Simulation results demonstrate that the proposed Fuzzy-based controller integrated anti wind-up significantly outperforms the conventional PID controller. The Fuzzy integrated anti wind-up controller capable reveals faster recovery time for load disturbance compared to classical PID controller.**

***Index Terms*—Proportional-Integral-Derivatives integrated Anti-Windup (PIDAW), Hybrid Fuzzy-PID (HFPID), Hybrid Fuzzy-PID Anti-Windup (HF-PIDAW), Membership Function (MF).**

I. INTRODUDCTION

Since the 1930s, PID controllers have been widely applied in industrial processes because they are easy to compute and develop, efficient, and reliable [1]–[6]. According to [7], hundreds of tuning methods have been developed over the years to improve PID performance. Yet it has not been officially established that any one method is the best. One of the main disadvantages of classical PID controllers is integral windup, a phenomenon that results from input saturation—an ordinary nonlinear characteristic of control systems. It takes place when the output of the controller goes beyond the limits of the actuator, a situation that frequently occurs during large disturbances (perturbation) or when there is a change in the setpoint. In such a case, the integral component of the PID continues to accumulate error even though the actuator is no longer able to respond, causing the control signal to become excessively large.

As a result, the system may experience large overshoots, longer settling times, suffer of lag for recovery time or even instability due to perturbation or disturbance attack, [8]–[11].

The issue worsens when the controller cannot reduce the excessive signal after the actuator returns to its normal operating range, causing the feedback loop to become ineffective and the controller to respond incorrectly.

Input saturation and wind-up are common nonlinear-system issues that must be addressed in PID controller design to maintain stable and efficient performance. [8], [12], [13]. In steam distillation process, the PID controller are commonly utilized in order to regulate the whole process [14]–[18].

However, only a limited number of studies on PID controller development have considered the windup phenomenon in steam distillation systems. [19]–[21]. To date, engineers and practitioners have primarily focused on regulating the steam flow in distillation columns without considering the potential occurrence of wind-up phenomena. [10], [21].

Classical PID controllers are limited in handling integral windup caused by actuator constraints, which can lead to overshoot, steady-state error, and instability [10]. This issue is linked to the integral action of the PID, which keeps accumulating error even when the actuator has reached its limits. As a result, the controller generates signals that exceed the actuator's operating range, leading to integral windup [22], [23]. This breaks the feedback loop and degrades system performance, causing problems like high overshoot, steady-state error, lag of recovery time, and instability [10], [24], [25]. To address this, a PID controller with Anti Wind-up (PIDAW) has been developed. While it reduces wind-up effects, it may still fall short in minimizing overshoot and settling time. Therefore, fuzzy-based controllers, such as Hybrid Fuzzy-PID (HF-PID) and Hybrid Fuzzy-PID with Anti-Windup (HF-PIDAW), have been introduced. Comparative studies show that HF-PIDAW performs better than HF-PID, especially in reducing overshoot and settling time.

This manuscript is submitted on September 1, 2026, revised on October 2, 2026, accepted on October 6, 2026 and published on October 31, 2026.

Haslizamri Md Shariff and Ku Siti Syahidah Ku Mohd Noh is currently a lecturer in the Centre of Foundation Studies, Universiti Teknologi MARA, Dengkil Campus Selangor Malaysia.

Mohd Hezri Fazalul Rahiman and Mazidah Tajjudin are currently a senior lecturer with the Faculty of Electrical Engineering, Universiti Teknologi MARA, Malaysia. Mohd Hezri Marzaki is currently a lecturer in the Wawasan Open University Penang, Malaysia. Mohd Hafiz A. Jalil is currently a senior lecturer in the Universiti Tun Hussein Onn Johor Malaysia.

*Corresponding author
Email address: hezrif@uitm.edu.my

1985-5389/© 2026 The Authors. Published by UiTM Press. This is an open access article under the CC BY-NC-ND license (http://creativecommons.org/licenses/by-nc-nd/4.0/).

This study proposes an HF-PIDAW controller tuned using the Integral Square Error (ISE) method to mitigate windup and improve closed-loop system performance. [26].

II. PID AND PID ANTI-WINDUP STRUCTURE

The PID is the feedback controller that consist of three elements (as shown in Fig. 1) knowns as Proportional action, *P*, Integral action, *I* and Derivative action, *D*. The PID structure is shown in Equation (1)

$$u(t) = K_p e(t) + \int_0^t K_i\, e(t)dt + K_d \frac{de(t)}{dt} \quad (1)$$

Where the *Kp*, *Ki* and *Kd* are the proportional gain, integral gain and derivative gain respectively. Those gains is able to express as in Equation (2), (3) and (4)

$$K_p = K_p \quad (2)$$

$$K_i = \frac{K_p}{T_i} \quad (3)$$

$$K_d = K_p T_d \quad (4)$$

Where the T_i and T_d indicates the integral time constant and derivative time constant.

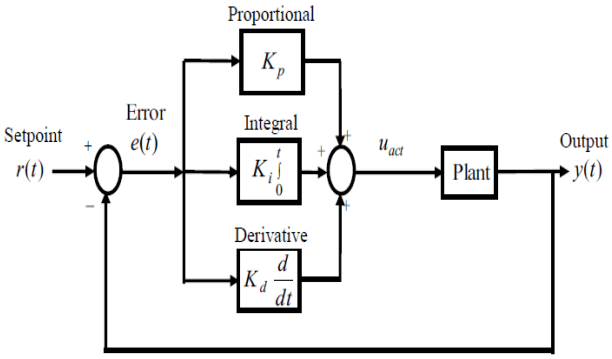

Fig. 1. Basic PID Controller Block Diagram.

The PID controller is able to control a system response at a desired set point so that there is no error between output signal and desired set point. The PID parameter's have their own function where the proportional gain gives output which is proportional to current error, *e(t)*. It compares between reference signal versus output value and; resulting error is multiplied with proportional constant to obtain the output signal. Due to limitation of proportional gain, the integral action is needed to improve the steady state error. The integral action will improve the steady state error so that the output is close to desired set point. Meanwhile, derivative action is to improve the system response by anticipating future behavior of the error. The PID controller remains widely used in industrial applications due to its simple design and ease of operation. However, it has limitations when dealing with nonlinear system dynamics and actuator saturation, particularly in regulating the integral action within the saturated region.

In this research, an anti-windup function is integrated into the conventional PID structure through an additional feedback loop, as shown in Fig. 2. This feedback determines the difference between the saturated control signal and the actual unsaturated control signal, u_{act}.

Integral windup occurs when the control input exceeds the actuator's saturation limits, causing the integrator to continue accumulating error. To overcome this problem, the anti-windup mechanism feeds the difference between the saturated and actual control signals back to the integrator through a gain of $(1/T_a)$. This allows the integral action to be continuously adjusted until the control signal returns to the allowable range and the system reaches the desired set point.

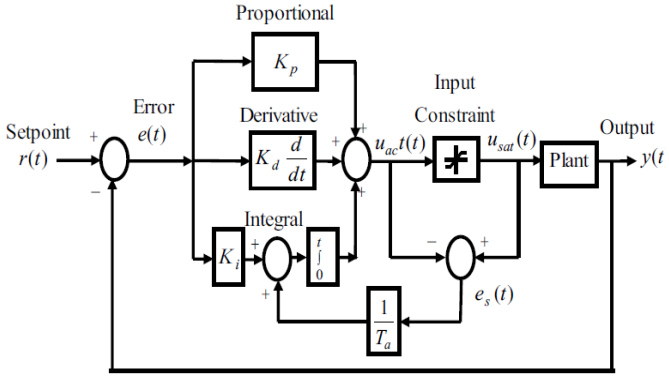

Fig. 2. PID Integrated Anti-Windup (PIDAW) Contoller Block Diagram.

To ensure the controller has high performance; the selection of Tracking Time Constant, T_a value is important [45]. The T_a value highly effect on new integrator feedback to reset faster or not and, this phenomenon indirectly effect on overall controller performance [46]. In [47] has suggested the range selection of Tracking Time Constant, T_a value as in Equation (5)

$$T_i \geq T_a \geq T_d \quad (5)$$

So, referring to the Equation (5), determination of T_a values as in Equation (6), (7) and (8)

$$T_a = T_d \quad (6)$$

$$T_a = T_i \quad (7)$$

$$T_a = \sqrt{T_i T_d} \quad (8)$$

The advantage of selection T_d value as smallest value which is $T_a = T_d$; will contribute the fastest reset time to the integrator [29]. The values of new T_a will be applied as new integrator feedback for PID Integrated Anti Wind-up strategies. The compensator will be developed using Tracking Time Constant values based on Equation (6), (7) and (8). Each compensator will be evaluated using transient response and performance indexes to determine the best controller.

III. HFPID COMMON AND HFPIDAW STRUCTURE

Today, classical PID controllers integrated with fuzzy logic are widely applied to enhance the robustness and performance of classical PID structures. In a fuzzy-PID controller, the PID gains are automatically adjusted based on error information processed by the fuzzy logic system. The basic configuration of the fuzzy-PID control system is illustrated in Fig. 3.

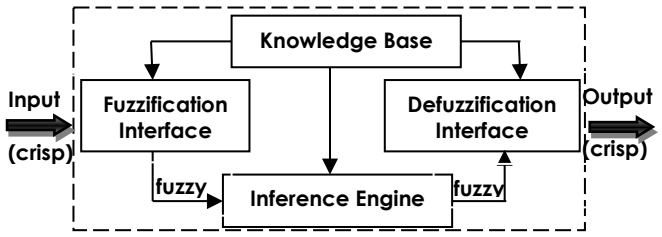

Fig. 3. Configuration of Fuzzy System.

The fuzzy logic controller supervises the PID algorithm by continuously adjusting the PID gains within predefined ranges. These gains are tuned according to a set of fuzzy rules to achieve optimal control performance. In this study, the Chien–Hrones–Reswick (CHR) tuning rule is used as a reference for defining the range of PID parameters. The membership functions (MFs) and fuzzy rules are designed based on experimental experience and engineering knowledge, taking into consideration the characteristics of the plant being controlled.

A. Parameters of Hybrid Fuzzy-PID Controller

The Mamdani inference system is employed to develop the Hybrid Fuzzy-PID (HFPID) controller using two approaches based on five and seven membership functions (MFs). Both the 5-MF and 7-MF approaches use two input variables: the error, (*e(t)*), and the derivative of the error, (*de/dt*). The three PID parameters, (*Kp*), (*Ki*), and (*Kd*), serve as the output variables of the HFPID controller and are subsequently used to adjust the corresponding parameters of the PID controller.

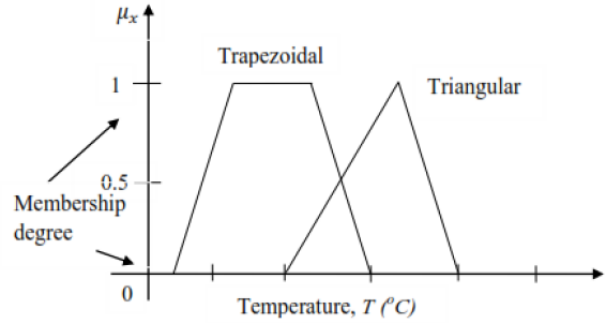

Fig. 4. Shape of Triangular and Trapezoidal MF.

Fig. 4 illustrates the trapezoidal and triangular membership functions (MFs) used for all linguistic variables in the 5-MF and 7-MF fuzzy systems. Selecting appropriate MFs is a key challenge in fuzzy system design, as their shape and arrangement significantly influence controller performance. There is no universal method for determining the optimal MF shape, as the selection depends on the specific application and system characteristics. Nevertheless, triangular and trapezoidal MFs are widely used in fuzzy logic controllers due to their simplicity and low computational cost. Among them, triangular MFs are particularly preferred for their straightforward implementation and computational efficiency.-The fuzzy rules are developed by mapping the behavior of the controlled system through an input–output relationship. Each rule consists of two input variables (antecedents) and one output variable (consequent). A total of 49 if–then rules were developed, as summarized in Table I. In this study, the PID parameters K_p. K_i, K_d are defined within the ranges [*Kp min Kp max*], [*Ki min Ki max*] and [*Kd min Kd max*] respectively. These parameter ranges were determined through PID control simulations to establish an effective and feasible fuzzy rule base. The PID parameters are then normalized to the interval ([0,1]), as shown in Equations (9), (10), and (11).

$$K'p = \frac{K_p - K_{p\,\min}}{K_{p\,\max} - K_{p\,\min}} \tag{9}$$

$$K'i = \frac{K_i - K_{i\,\min}}{K_{i\,\max} - K_{i\,\min}} \tag{10}$$

$$K'd = \frac{K_d - K_{d\,\min}}{K_{d\,\max} - K_{d\,\min}} \tag{11}$$

IV. THE SIMULATION OF STEAM DISTILLATION PROCESS

The response analysis of PID-ISE, PIDAW-ISE and HFPID-ISE for load disturbances recovery are as shown in Table II. In general, the results indicate that the fastest recovery time for load disturbances are achieved by HFPIDAW- ISE -T_i -5MF , HFPIDAW- ISE -$\sqrt{T_i T_d}$ -5MF and HFPIDAW- ISE -T_d -5MF controllers requiring only 5631 seconds, compared to other classical and advance fuzzy controllers. The results also present that all advance fuzzy controllers achieve more than 50% improvement during load disturbances recovery as compared to classical PID controller. These results clearly indicate that advance fuzzy controller provide a better performance compared with classical for recovering load disturbances.

The response of the HFPIDAW-ISE-based controller (advance controller) for load disturbance recovery is shown in Fig. 6, with the analysis in Table II. The fastest recovery time is achieved by the HFPIDAW- ISE-T_i -5MF, HFPIDAW- ISE -$\sqrt{T_i T_d}$ -5MF and HFPIDAW- ISE -T_d -5MF configurations, which take 5631 seconds. In comparison, the HFPIDAW- ISE-T_i -7MF, HFPIDAW- ISE -$\sqrt{T_i T_d}$ -7MF and HFPIDAW-ISE -T_d -7MF configurations take 5675 seconds. The 5MF configurations also show a 6.250% improvement in recovery time compared to the 7MF configurations. These results indicate that the 5MF configurations offer better performance for recovering from load disturbances than the 7MF configurations.

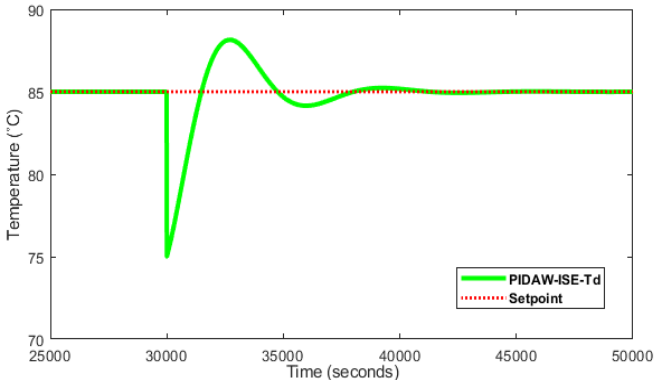

Fig. 5. Output response for simulation PIDAW-ISE-T_d-5MF for load disturbance test.

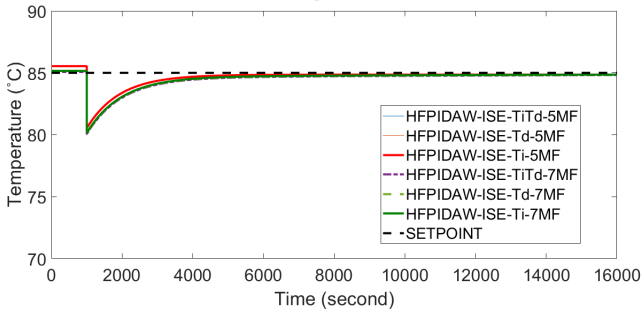

Fig. 6. Simulation Output of HFPIDAW-ISE-T_i -5MF, HFPIDAW-ISE -$\sqrt{T_i T_d}$ -5MF, HFPIDAW-ISE -T_d -5MF, HFPIDAW- ISE -$\sqrt{T_i T_d}$ -7MF, HFPIDAW-ISE -T_d -7MF and HFPIDAW-ISE -T_i -7MF Controllers for Load Disturbance Test.

TABLE II. SIMULATION RESPONSE ANALYSIS OF HFPIDAW-ISE BASED CONTROLLERS WITH DIFFERENT TRACKING TIME CONSTANT, T_a FOR LOAD DISTURBANCES TEST

Controller Name with Tracking Time Constant, T_a	**Recover Load Disturbances (seconds)**
PID-ISE	11763
PIDAW-ISE $T_a = T_d$	11752
HFPIDAW- ISE -T_i -5MF	5631
HFPIDAW- ISE -$\sqrt{T_i T_d}$ -5MF	5631
HFPIDAW- ISE -T_d -5MF	5631
HFPIDAW- ISE -T_i -7MF	5675
HFPIDAW- ISE -$\sqrt{T_i T_d}$ -7MF	5675
HFPIDAW- ISE -T_d -7MF	5675

Note: * indicate the best performance by category

V. CONCLUSION

From the performance of recover load disturbance test described in Table II, the results reveals that HF-PIDAW-ISE with 5MF provide 6.25% faster time for recover the present of load disturbances as compared with time required by HF-PIDAW-CHR with 7MF. Therefore, based on this simulation results it will conclude that the HFPIDAW based controller provide better performance as compared with classical PID based controller thus indicated that the implementation of HFPIDAW based controller capable to enhance the regulation of temperature of steam distillation process. Fig. 5 obviously reveal the capability of HFPIDAW in preventing the system from wind-up phenomenon compared with classical PID that produced a wind-up controller output. These results evidently show that HFPIDAW improves PID significantly. It has ability to prevent the system from the wind-up situation thus indirectly capable in recover faster load disturbance in the system.

VI. ACKNOWLEDGEMENT

The authors would like to thank to the Faculty of Electrical Engineering, Universiti Teknologi MARA Shah Alam Selangor for financial support and facilities provided for this research.

VII. REFERENCES

[1] N. Kasuan, Z. Muhammad, Z. Yusoff, M. H. F. Rahiman, M. N. Taib, and Z. A. Haiyee, "Extraction of Citrus hystrix D.C. (Kaffir Lime) essential oil using automated steam distillation process: Analysis of volatile compounds," *Malaysian J. Anal. Sci.*, vol. 17, no. 3, pp. 359–369, 2013.

[2] M. Y. Abduh, E. Nababan, F. Ginting, J. Juliati, and H. Nugrahapraja, "Biodelignification of lemon peels using Aspergillus sp. to improve yield and composition of extxracted lemon oil," *IIUM Engineering Journal*, vol. 21, no. 2. pp. 55–66, 2020.

[3] M. Y. Abduh, E. Nababan, F. Ginting, J. Juliati, and H. Nugrahapraja, "Biodelignification Of Lemon Peels Using Aspergillus Sp. To Improve Yield And Composition Of Extxracted Lemon Oil," *IIUM Eng. J.*, vol. 21, no. 2, pp. 55–66, 2020.

[4] N. H. Hamidi, N. A. M. Alwi, H. Tarmalingam, S. S. A. Kutty, and S. N. N. M. Nor, "Effect of extraction time and temperature on total flavanoid contents of petai belalang (Leucaena leucocephala) seed pretreated by enzymatic hydrolysis," *Pertanika J. Sci. Technol.*, vol. 29, no. 3, pp. 1751–1761, 2021.

[5] X. Fei, W. Xiao-long, and X. Yong, "Development of energy saving and rapid temperature control technology for intelligent greenhouses," *IEEE Access*, pp. 1–1, 2021.

[6] S. R. Richter P, Sepúlveda B, Oliva R, Calderón K, "Screening and determination of pesticides in soil using continuous subcritical water extraction and gas chromatography-mass spectrometry.," *J. Chromatogr A. 2003 Apr 25;994(1-2)169-77.*

[7] S. H. R.M. Smith, "Supercritical Fluids in Chromatography and Extraction," *Elsevier Sci. 1 Ed. (Dec 11 1997).*

[8] P. P. Scalia S, Giuffreda L, "Analytical and preparative supercritical fluid extraction of chamomile flowers and its comparison with conventional methods.," *J. Pharm Biomed Anal. 1999 Nov;21(3)549-58.*

[9] B. R. R. Rao, P. N. Kaul, K. V Syamasundar, and S. Ramesh, "Chemical profiles of primary and secondary essential oils of palmarosa (Cymbopogon martinii (Roxb .) Wats var . motia Burk .)," vol. 21, pp. 121–127, 2005.

[10] O. B. Adegoke GO, "Storage of maize and cowpea and inhibition of microbial agents of biodeterioration using the powder and essential oil of lemon grass (Cymbopogon citratus)," *Int. Biodeterior. Biodegrad. 1996;37(1-2)81-84.*

[11] K. H. Ozel MZ, "Superheated water extraction, steam distillation and Soxhlet extraction of essential oils of Origanum onites.," *Anal Bioanal Chem. 2004 Aug;379(7-8)1127-33. Epub 2004 Jun 4.*

[12] A. C. . Ozel, M Z ; Gogus, F ; Lewis, "Subcritical water extraction of essential oils from Thymbra spicata," *J. Agric. Food Chem. Vol. 82, No. 3, 08.2003, p. 381-386.*

[13] X. Deng, C., Xu, X., Yao, N., Li, N., Zhang, "Rapid determination of essential oil compounds in Artemisia Selengensis Turcz by gas chromatography-mass spectrometry with microwave distillation and simultaneous solid-phase microextraction," *Anal. Chim. Acta*, vol. 556, no. 2, pp. 289–294, 2006.

[14] X. Deng, C., Mao, Y., Hu, F., Zhang, "Development of gas chromatography-mass spectrometry following microwave distillation and simultaneous headspace single-drop microextraction for fast determination of volatile fraction in Chinese herb.," *J. Chromatogr.*, vol. 1131, no. 1, pp. 193–198, 2006.

[15] O. . Catchpole, J. . Grey, K. . Mitchell, and J. . Lan, "Supercritical antisolvent fractionation of propolis tincture," *J. Supercrit. Fluids*, vol. 29, no. 1–2, pp. 97–106, Apr. 2004.

[16] Mohd Hezri Fazalul Rahiman, "System Identification Of Steam

Distillation Essential Oil Extraction System." Phd Dissertation, Universiti Teknologi MARA Malaysia, 2009.

[17] S. Álvarez De Miguel, J. G. Mollocana Lara, C. E. García Cena, M. Romero, J. M. García De María, and J. González-Aguilar, "Identification model and PI and PID controller design for a novel electric air heater," *Automatika*, vol. 58, no. 1, pp. 55–68, 2017.

[18] W. Wu, C. Hsieh, B. Shi, X. Yang, and L. Yan, "Plantwide control for optimal operation of industrial-scale crude distillation unit processes," *Chem. Eng. Commun.*, vol. 0, no. 0, pp. 1–15, 2018.

[19] E. I. Andi Adriansyaha*, Shamsudin H. M. Aminb, Anwar Minarsoa, "Improvement Of Quadrotor Performance With Flight Control System Using Particle Swarm Proportional-Integral-Derivative (PS-PID)," *J. Teknol. UTM*, vol. 6, pp. 121–128, 2017.

[20] A. Dehghani* and H. Khodadad, "Self-Tuning Pid Controller Design Using Fuzzy Logic For A Single-Link Flexible Joint Robot Manipulator," *J. Teknol. UTM*, vol. 13, pp. 115–120, 2016.

[21] A. Adriansyah, H. Suwoyo, and Y. Tian, "Improving Wall-Following Robot Performance Using Pid-Pso Controller," *J. Teknol. UTM*, vol. 3, pp. 119–126, 2019.

[22] P. Taylor, J. Garrido, F. Vázquez, and F. Morilla, "Multivariable PID control by decoupling," *Int. J. Syst. Sci.*, no. August, pp. 37–41, 2014.

[23] M. Shamsuzzoha, "Robust PID controller design for time delay processes with peak of maximum sensitivity criteria," *J. Cent. South Univ.*, vol. 21, no. 10, pp. 3777–3786, 2014.

[24] A. N. M. M. Oktaf Agni Dhewa1,Tri Kuntoro Priyambodo2*, "Enhancement Of Stability On Autonomous Waypoint Mission Of Quadrotor Using Lqr Integrator Control," *IIUM Eng. J.*, vol. 23, no. 1, pp. 129–158, 2022.

[25] Y. Tian, Z. Cao, D. Hu, X. Gao, L. Xu, and W. Yang, "A Fuzzy PID-Controlled Iterative Calderon’s Method for Binary Distribution in Electrical Capacitance Tomography," *IEEE Trans. Instrum. Meas.*, vol. 70, 2021.

[26] C. Li, H. Zhao, S. Zhen, and Y.-H. Chen, "Control Design With Optimization for Fuzzy Steering-by-Wire System Based on Nash Game Theory," *IEEE Trans. Cybern.*, pp. 1–10, 2021.

[27] T. Holicki, C. W. Scherer, and S. Trimpe, "Controller Design via Experimental Exploration with Robustness Guarantees," *IEEE Control Syst. Lett.*, vol. 5, no. 2, pp. 641–646, 2021.

[28] M. Shamsuzzoha, "Robust PID controller design for time delay processes with peak of maximum sensitivity criteria," *J. Cent. South Univ.*, vol. 21, no. 10, pp. 3777–3786, 2014.

[29] K. J. Astrom and R. M. Murray, *Feedback Systems*. Princeton University Press Princeton And Oxford, 2012.

[30] Z. M. Yusoff, N. Dalila, K. Ashar, Z. Muhammad, N. F. Razali, and S. Azeehan, "Comparison Performance of Robustness Test using Intelligent Fuzzy based Controller for Simulation Study," *Int. J. Eng. Technol.*, vol. 7, pp. 154–158, 2018.

[31] J. Astrom and T. Hagglund, *PID Controllers:Theory, Design and tuning, 2nd ed.: Instrument Society of America (ISA)*. 1995.

[32] S. Das, I. Pan, and S. Das, "Performance comparison of optimal fractional order hybrid fuzzy PID controllers for handling oscillatory fractional order processes with dead time," *ISA Trans.*, vol. 52, no. 4, pp. 550–566, 2013.

[33] S. Gros, M. Zanon, R. Quirynen, A. Bemporad, and M. Diehl, "From linear to nonlinear MPC : bridging the gap via the real-time iteration," *Int. J. Control*, no. 1, pp. 1–19, 2016.

[34] Y. Zhou, B. Qi, S. Huang, and Z. Jia, "Fuzzy PID Controller for FOPDT system based on a hardware-in-the-loop simulation," *Chinese Control Conf. CCC*, vol. 2018-July, pp. 3382–3387, 2018.

[35] Z. Tian, Y. Ren, and G. Wang, "Fuzzy-PID controller based on variable universe for main steam temperature system," *Aust. J. Electr. Electron. Eng.*, vol. 00, no. 00, pp. 1–8, 2018.

[36] S. Tabatabaee, P. Roosta, M. S. Sadeghi, and A. Barzegar, "Fuzzy PID controller design for a heat exchanger system: The energy efficiency approach," *2010 Int. Conf. Comput. Appl. Ind. Electron.*, no. Iccaie, pp. 511–515, Dec. 2010.

[37] M. Petrov, I. Ganchev, and A. Taneva, "Fuzzy PID Control of Nonlinear Plants," no. September, pp. 0–5, 2002.

[38] R. De Keyser, C. I. Muresan, and C. M. Ionescu, "Autotuning of a Robust Fractional Order PID Controller," vol. 51, no. 25. pp. 466–471, 2018.

[39] Z. Wu, D. Li, and L. Wang, "Control of the superheated steam temperature: A comparison study between PID and fractional order PID controller," *Chinese Control Conf. CCC*, vol. 2016-Augus, no. 1, pp. 10521–10526, 2016.

[40] S. Zhao, S. Liu, R. De Keyser, and C. M. Ionescu, "The application of a new PID autotuning method for the steam/water loop in large scale ships," *Processes*, vol. 8, no. 2, 2020.

[41] M. Mahmud, S. M. A. Motakabber, A. H. M. Zahirul Alam, and A. N. Nordin, "Adaptive PID Controller Using for Speed Control of the BLDC Motor," *IEEE Int. Conf. Semicond. Electron. Proceedings, ICSE*, vol. 2020-July, pp. 168–171, 2020.

[42] K. Premkumar, T. Thamizhselvan, M. Vishnu Priya, S. B. Ron Carter, and L. P. Sivakumar, "Fuzzy anti-windup pid controlled induction motor," *Int. J. Eng. Adv. Technol.*, vol. 9, no. 1, pp. 184–189, 2019.

[43] A. Ramya, A. Imthiaz, and M. Balaji, "Hybrid Self Tuned Fuzzy PID controller for speed control of Brushless DC Motor Hybrid Self Tuned Fuzzy PID controller for speed control of Brushless DC Motor," *Autom. J. Control. Meas. Electron. Comput. Commun.*, vol. 1144, 2017.

[44] J. M. G. de M. & J. G.-A. S. Álvarez de Miguel, J. G. Mollocana Lara, C. E. García Cena, M. Romero, "Identification model and PI and PID controller design for a novel electric air heater," *Autom. J. Control. Meas. Electron. Comput. Commun.*, vol. 1144, 2017.

[45] Muhamad Hafiz Abd Jalil, "Model Reference Adaptive Control (MRAC) Controller Towards Temperature Regulation Improvement of Glycerin Bleaching Process," University Technology MARA Malaysia, 2019.

[46] Karl Johan Astrom, *Feedback Systems*. Princeton University Press Princeton And Oxford, 2002.

[47] P. A. Ioannou and P. V. Kokotovic, "Instability analysis and improvement of robustness of adaptive control," *Automatica*, vol. 20, pp. 583–594, 1984.

[48] H. Md Shariff, M. H. Fazalul Rahiman, R. Adnan, M. H. Marzaki, M. Tajjudin, and M. H. A.Jalil, "The Anti Windup PID Controller ISE Tuning Based for Small-Scale Steam Distillation System," *J. Electr. Electron. Syst. Res.*, vol. 16, no. June 2020, pp. 94–99, 2020.